eurocell® All together better

eurologik®

Chamfered window and door system

MAIN PROFILES

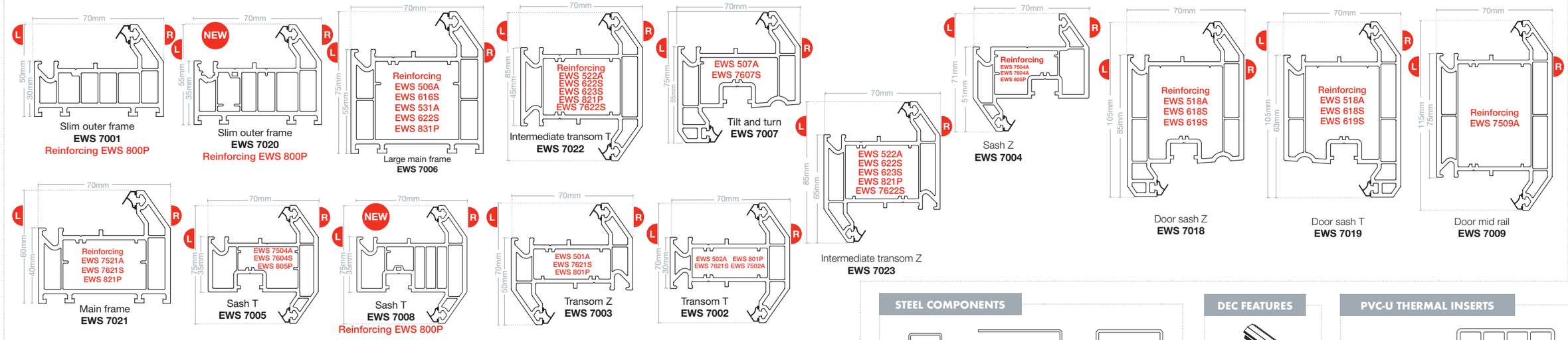

STEEL COMPONENTS

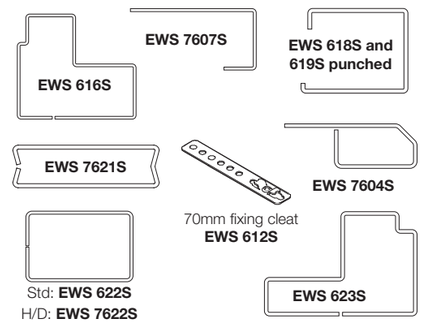

DEC FEATURES

Mock sash horn kit
EWS 7901

Arch top inserts
EWS 7911 to be used with EWS 7005 and 7312

PVC-U THERMAL INSERTS

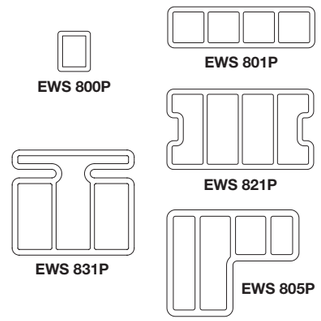

CILLS, ANGLES & TRIMS

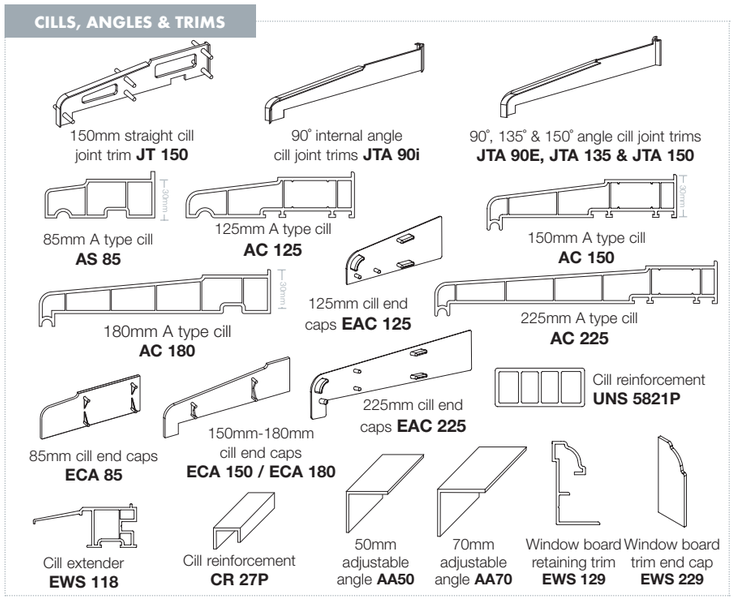

ANCILLARIES, BEADS & GASKETS

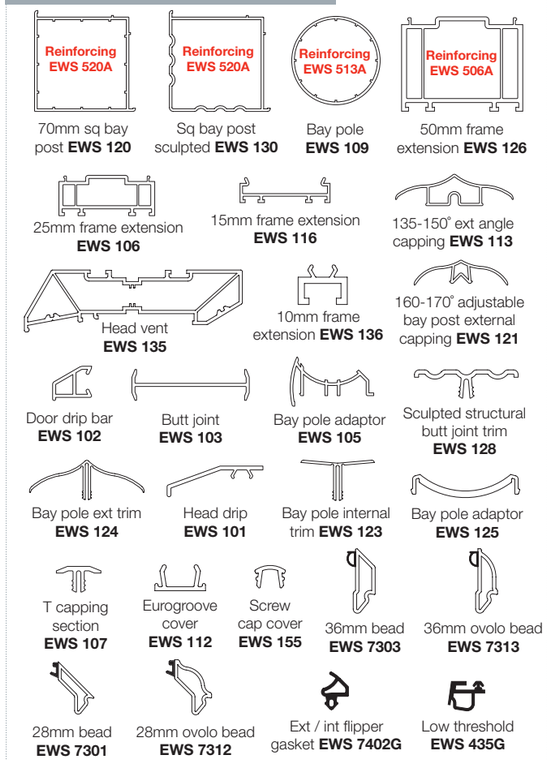

ALUMINIUM COMPONENTS

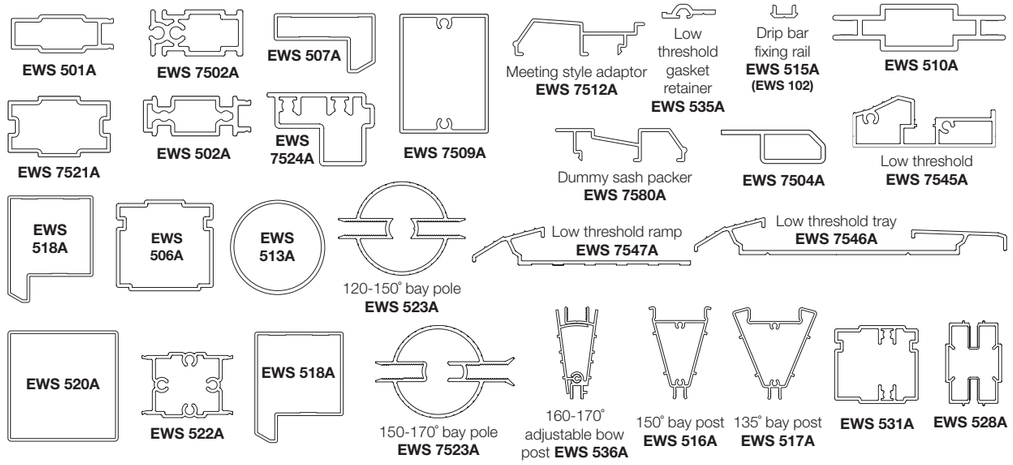

MOULDINGS

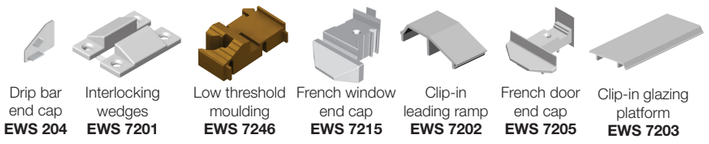

Note: drawings not to scale. The product codes of the main frames on this chart are for the post-consumer recycled PVC-U version of **eurologik**. The 100% virgin PVC-U products are available to order on separate codes. For more details, please contact the Customer Care Team on **01773 842222** or email **customercare@eurocell.co.uk**

WCLOGIKCH/APR16/TS

KEY Left face L Right face R

To place your order call **01773 842222** or email **customercare@eurocell.co.uk**

Visit **eurocell.co.uk**